American Louver Spiral Duct Grille Drawing.pdf 1 4/15/2025 1:02:46 PM

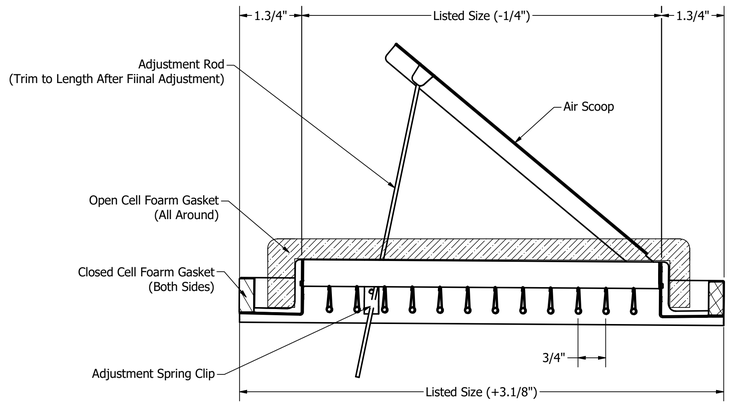

SECTION A-A
SCALE 1 / 2

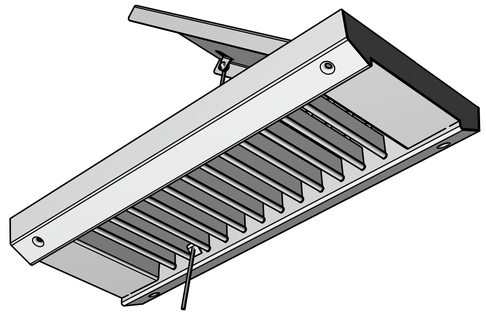

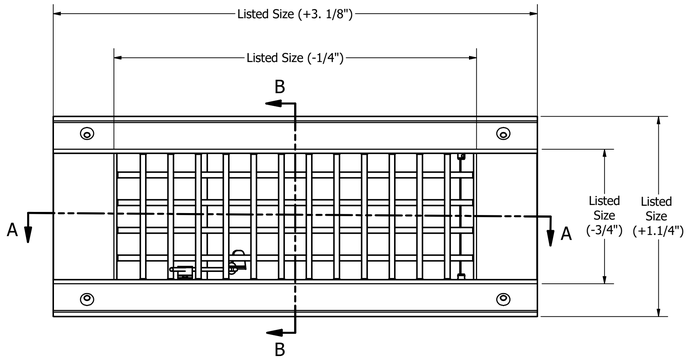

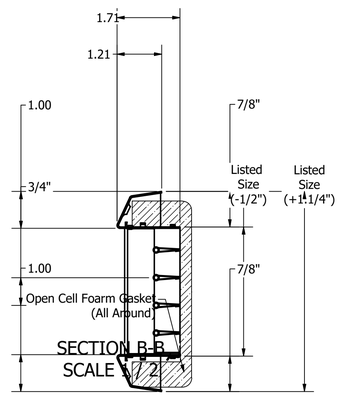

SECTION B-B
SCALE 1 / 2

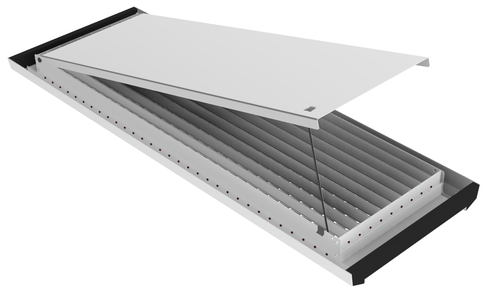

Minumum and Maximum Duct Diameter							
Duct Diameter	Grille Height						
	3	4	6	8	10	12	14
Min/Max	10-36	10-36	12-36	20-36	24-36	24-36	24-36

MINIMUM DUCT SIZE

HEIGHT	WIDTH								
	10	12	14	16	18	20	24	30	36
3	6	6	6	6	6	6	6	6	6
4	10	10	10	10	10	10	10	10	10
6	12	12	12	12	12	12	12	12	12
8	20	20	20	20	20	20	20	20	20
10			24	24	24	24	24	24	24
12				30	30	30	30	30	30

DRAWN	12/20/2024
CHECKED	
QA	
MFG	
APPROVED	

AMERICAN LOUVER COMPANY®

TITLE: UNIVERSAL SPIRAL GRILLES WITH SCOOP ALUMINUM FINISH

SIZE: D | DWG NO: SUBMITAL AND DRAWING | REV

SCALE: 1 / 2 | SHEET 1 OF 1